SINCE 1959
EIC EGYPT
Leading Green, Living Clean

FORCEZ

FORCEZ

Battery Catalogue

info@eic-egypt.com
www.eic-egypt.com
(+20) 101000 2030

**Leading Green.
Living Clean.**

Jász-Plasztik Ltd.

battery production, injection moulding, semi-finished and finished goods manufacturing, production of EPS and packaging, paint and plaster, sheet and film extrusion, tool design and manufacturing, car sales & services, own logistic department.

POWERED BY

CONTENT

About us 4

Automotive Starter Battery 5

- Electric Power 6
- Electric Power SHD 7
- Electric Power SMF 7
- Electric Power JIS 8
- Electric Power Gold 9
- Electric Power EFB 10

Semi traction battery 11

JPmoto - Motorcycle battery 12

Traction battery 14

- DIN/PzS range 15
- BS/PzB range 16
- JPOPzS range 16

Accessories 17

Notes 19

ABOUT US

The company was established by four members in May, 1990. That time the company's main activities were injection moulding, tool design and manufacturing. Soon – after four years – its range of activities expanded with the production of different types of batteries, and other difference commercial branches. By now the number of the workers has increased from 20 to more than 3500; this clearly shows the linear progress of the company. The reason of this progress is the high quality of the products as well as the aspiration of the company to accommodate to the constantly shifting requirements of the market in all cases; therefore the Ltd. performs continuous improvements in its activities.

CERTIFICATE

This is to certify that

Józ-Plastik Kft.

has implemented and maintains an Environmental Management System.

ISO 14001 : 2015

IQNet

THE INTERNATIONAL CERTIFICATION NETWORK

CERTIFICATE

Józ-Plastik Kft.

has implemented and maintains an Environmental Management System.

ISO 14001 : 2015

The quality and the competitiveness of our products are greatly influenced by the quality and modernity of the built-in components. As a result of these, all procedures of the company are fully compatible to the quality standards of ISO 9001 and to the environmental standards of ISO 14001.

As for the battery division, substantial investments were made in the last years. A battery recycling and production plant of 36.000 m² were built. The company has bought a lot of new machines like ball mills, vacuum mixers, new production lines for starter batteries, new formation technology for truck batteries and traction cells etc..

The recycling plant was the first in Hungary. The capacity of the equipment is 80 tons used batteries per day and 45 tons of refined lead per day. The start of this new plant was in 2015.

POWERED BY

Automotive SLI Battery

MAIN FEATURES

Wet-charged: filled with electrolyte and charged, ready for use.

The batteries below 100 Ah are made with Ca-Ca technology and are maintenance-free:

- Use of Pb-Ca alloy ensures very low water consumption and self-discharge. These types of batteries are maintenance-free (battery does not need any water topping up) against traditional types.
- Unique look
- Longer service time / lifetime
- The central lug position and the reduced internal resistance result in increased starting performance.
- Batteries up to 100Ah are made with punched +Ca and continuous casted-Ca technology

The batteries above 100 Ah (HD) are shake-proof for Heavy Duty use and need maintenance:
Maintenance-free hybrid technology ensures minimum water consumption.

- Batteries above 100 Ah – produced for trucks – are designed for industrial conditions (Heavy Duty design)
- The ConCast production technology and tree design of negative grids provide good frame stability, optimum electrical conductance and increased cold start performance for the battery.
- We pinch the plate sets in the battery container, after that we fix them by using a special compound. The battery has a very good vibration resistance due to the tightening technology.
- Robust design with set bonding.
- The polyethylene envelope separators provide the optimal protection against short circuit and more reliable operational safety.

Electric POWER

SHD

CaCa - Black Box (MF)

JP Order code	Voltage [V]	Capacity 20 h [Ah]	Cold cranking[1] EN [A]	Cold cranking[1] DIN	Layout[2]	Terminal[3]	Fixation[4]	Dimensions [mm] L	W	H	H1	Notes[5]
131 545 735 110	12	45	360	216	0	1	B13	210	175	-	175	Kamina LB1
131 545 736 110	12	45	360	216	1	1	B13	210	175	-	175	Kamina LB1 +left
131 545 715 110	12	45	360	216	0	1	B13	210	175	-	190	Kamina L1
131 550 715 110	12	50	420	252	0	1	B13	210	175	-	190	Kamina L1
131 555 735 110	12	55	450	270	0	1	B13	241	175	-	175	Kamina LB2
131 555 736 110	12	55	450	270	1	1	B13	241	175	-	175	Kamina LB2 +left
131 555 715 110	12	55	450	270	1	1	B13	241	175	-	190	Kamina L2
131 560 735 110	12	60	500	300	0	1	B13	241	175	-	175	Kamina LB2
131 560 715 110	12	60	500	300	0	1	B13	241	175	-	190	Kamina L2
131 566 735 110	12	66	540	324	0	1	B13	276	175	-	175	Kamina LB3
131 572 735 110	12	72	680	408	0	1	B13	276	175	-	175	Kamina LB3
131 572 715 110	12	72	680	408	0	1	B13	276	175	-	190	Kamina L3
131 588 715 110	12	88	720	432	0	1	B13	352	175	-	190	Kamina L5
131 590 715 110	12	90	720	432	0	1	B13	312	175	-	190	Kamina L4
131 600 715 110	12	100	800	480	0	1	B13	352	175	-	190	Kamina L5

PbSb Heavy Duty - Black Box (HD)

JP Order code	Voltage [V]	Capacity 20 h [Ah]	Cold cranking[1] EN [A]	Cold cranking[1] DIN	Layout[2]	Terminal[3]	Fixation[4]	Dimensions [mm] L	W	H	H1	Notes[5]
131 610 412 110	12	110	800	480	3	1	B00	513	189	194	223	DIN A
131 610 425 110	12	110	800	480	4	1	B03	511	175	-	212	Handle
131 610 426 110	12	110	800	480	3	1	B03	511	175	-	212	Handle
I-111 625 241 110	12	125	750	450	0	1	B00	342	172	262	286	Compact-B
131 625 412 110	12	125	850	510	3	1	B00	513	189	194	223	DIN A
141 635 406 110	12	135	880	528	3	1	B03	511	175	204	226	Handle
131 643 432 110	12	143	950	570	3	1	B00	514	218	188	212	Handle
131 643 435 110	12	143	950	570	4	1	B03	514	218	188	212	Handle
131 643 436 110	12	143	950	570	3	1	B03	514	218	188	212	Handle
131 645 412 110	12	145	900	540	3	1	B00	513	189	194	223	DIN A
131 655 405 110	12	155	900	540	4	1	B03	511	175	204	226	Handle
131 655 406 110	12	155	900	540	3	1	B03	511	175	204	226	Handle
131 657 432 110	12	157	950	570	3	1	B00	514	218	188	212	Handle
131 657 435 110	12	157	950	570	4	1	B03	514	218	188	212	Handle
131 657 436 110	12	157	950	570	3	1	B03	514	218	188	212	MAC 143
131 670 412 110	12	170	1000	600	3	1	B00	514	218	188	212	Handle
131 670 435 110	12	170	1000	600	4	1	B03	514	218	188	212	Handle
131 680 412 110	12	180	1000	600	3	1	B00	514	218	207	232	Handle
131 696 412 110	12	196	1050	630	3	1	B00	518	274	215	240	Handle
131 710 411 110	12	210	1100	660	4	1	B00	518	274	215	240	Handle
131 710 412 110	12	210	1100	660	3	1	B00	518	274	215	240	Handle
131 710 912 110	12	210	1100	660	3	1	B00	517	274	215	240	DIN C, FLAT LID
131 720 412 110	12	220	1150	690	3	1	B00	518	274	215	240	Handle
131 720 912 110	12	220	1150	690	3	1	B00	517	274	215	240	DIN C, FLAT LID

Notes: side 19.

SINCE 1959
Leading Green, Living Clean

PbCa - Black Box

JP Order code	Voltage [V]	Capacity 20 h [Ah]	Cold cranking[1] EN [A]	Cold cranking[1] DIN	Layout[2]	Terminal[3]	Fixation[4]	Dimensions [mm] L	W	H	H1	Notes[5]
131 680 412 1102	12	180	1100	660	3	1	B00	513	223	195	223	DIN B, SHD
131 725 412 1102	12	225	1250	750	3	1	B00	517	274	215	240	DIN C, SHD
131 725 912 1102	12	225	1250	750	3	1	B00	517	274	215	240	DIN C, FLAT LID SHD

SMF

SMF - Black Box

JP Order code	Voltage [V]	Capacity 20 h [Ah]	Cold cranking[1] EN [A]	Cold cranking[1] DIN	Layout[2]	Terminal[3]	Fixation[4]	Dimensions [mm] L	W	H	H1	Notes[5]
I-111 540 715 110	12	40	33	-	0	1	B03	175	175	-	175	SMF - L0
131 545 765 110	12	45	360	216	0	1	B13	210	175	-	190	SMF - L1
131 545 775 110	12	45	360	2216	0	1	B13	210	175	-	175	SMF - LB1
131 545 776 110	12	45	360	216	1	1	B13	210	175	-	175	SMF - LB1 +left
131 550 765 110	12	50	420	252	0	1	B13	210	175	-	190	SMF - L1
131 555 765 110	12	55	450	270	0	1	B13	242	175	-	190	SMF - L2
131 555 775 110	12	55	450	270	0	1	B13	242	175	-	175	SMF - LB2
131 555 776 110	12	55	450	270	1	1	B13	242	175	-	175	SMF - LB2 +left
131 560 765 110	12	60	500	300	0	1	B13	242	175	-	190	SMF - L2
131 560 775 110	12	60	500	300	0	1	B13	242	175	-	175	SMF - LB2
131 566 775 110	12	66	540	324	0	1	B13	276	175	-	175	SMF - LB3
131 572 765 110	12	72	680	408	0	1	B13	276	175	-	190	SMF - L3
131 572 775 110	12	72	680	408	0	1	B13	276	175	-	175	SMF - LB3
131 588 765 110	12	88	720	432	0	1	B13	352	175	-	190	SMF - L5
131 590 765 110	12	90	720	432	0	1	B13	315	175	-	190	SMF - L4
131 590 775 110	12	90	720	432	0	1	B13	315	175	-	175	SMF - LB4
131 600 765 110	12	100	800	480	0	1	B13	352	175	-	190	SMF - L5
I-111 610 113 110	12	110	740	-	0	1	B01	344	171	213	235	Compact-A
I-111 610 715 110	12	110	850	-	0	1	B03	393	175	-	190	SMF - L6

Notes: side 19.

POWERED BY EIC EGYPT
EIC EGYPT
STARTER BATTERIES

Electric POWER JIS

JIS

JP Order code	Model Nr.	Voltage [V]	Capacity 20 h [Ah]	Cold cranking[1] EN [A]	Layout	Terminal[6]	Fixa-tion[4]	Dimensions [mm]			
								L	W	H	H1
I-111 540 041 110	SMF 40B19L	12	35	300	0	SM	B00	187	127	226	190
I-111 540 042 110	SMF 40B19R	12	35	300	1	SM	B00	187	127	226	190
I-111 545 141 110	SMF NX100-S6L	12	45	430	0	SM	B00	238	129	225	190
I-111 545 142 110	SMF NX100-S6	12	45	430	1	SM	B00	238	129	225	190
I-111 560 141 110	SMF 55D23L	12	60	500	0	STD	B00	232	173	225	190
I-111 560 142 110	SMF 55D23R	12	60	500	1	STD	B00	232	173	225	190
I-111 570 145 110	SMF NX110-5L	12	70	600	0	STD	B01	260	173	222	190
I-111 570 146 110	SMF NX110-5	12	70	600	1	STD	B01	260	173	222	190
I-111 600 143 110	SMF NX120-7L	12	95	750	0	STD	B01	303	173	225	190
I-111 600 144 110	SMF NX120-7	12	95	750	1	STD	B01	303	173	225	190

Notes: side 19.

POWERED BY EIC EGYPT

ELECTRIC POWER GOLD

Electric Power Gold series offers great power and endurance for modern vechicles. The premium series batteries are absolutely maintenance-free due to modern calcium technology. Our new design provides increased starting power.

MAIN FEATURES

- All batteries are in black box
- Batteries are made with punched +Ca and continuous casted-Ca technology for longer life span
- Premium battery solution on the market
- "Sealed" battery equipped with Duplex lid with labyrinth system and flame arrestor (for gas recovery) for con trolled airflow, venting and optimized back pressure
- Up to 30% increased starting power
- Guaranteed start at extreme temperatures
- Higher safety

Premium - Black Box - SMF

JP Order code	Voltage [V]	Capacity 20 h [Ah]	Cold cranking[1] EN [A]	Cold cranking[1] DIN	Layout[2]	Terminal[3]	Fixa-tion[4]	Dimensions [mm]				Notes[5]
								L	W	H	H1	
161 556 765 110	12	56	540	324	0	1	B13	210	175	-	190	SMF-L1
161 554 775 110	12	54	510	306	0	1	B13	210	175	-	175	SMF-LB1
161 567 765 110	12	67	640	384	0	1	B13	242	175	-	190	SMF-L2
161 564 775 110	12	64	600	360	0	1	B13	242	175	-	175	SMF-LB2
161 577 765 110	12	77	730	438	0	1	B13	276	175	-	190	SMF-L3
161 574 775 110	12	74	720	432	0	1	B13	276	175	-	175	SMF-LB3
161 592 765 110	12	92	810	486	0	1	B13	315	175	-	190	SMF-L4
161 585 775 110	12	85	800	480	0	1	B13	315	175	-	175	SMF-LB4
161 600 765 110	12	100	920	552	0	1	B13	352	175	-	190	SMF-L5

Notes: side 19.

EFB

START STOP
EFB TECHNOLOGY

EFB batteries, also called Enhanced Flooded Batteries, are intended for use in vehicles with Start/Stop function. EFB batteries utilize the latest innovations in Ca/Ca flooded technology, providing superior power for the most demanding modern vehicles and their electrical systems.

MAIN FEATURES

- Range of 5 types with capacities from 60-95 Ah
- Excellent standard for START/STOP systems
- High starting power
- Long service life
- Cycle-resistant starter battery
- Glass matt separator and special active mass composition

JP Order code	Voltage [V]	Capacity 20 h [Ah]	Cold cranking[1] EN [A]	Cold cranking[1] DIN	Layout	Terminal[6]	Fixation[4]	Dimensions [mm] L	W	H	H1	Notes[5]
171 560 765 112	12	60	640		0	1	B13	242	127	-	190	SMF - L2 ME
171 565 775 112	12	65	680		0	1	B13	276	127	-	175	SMF - LB3 ME
171 570 765 112	12	70	760		0	1	B13	276	129	-	190	SMF - L3 ME
171 580 765 112	12	80	800		0	1	B13	315	129	-	190	SMF - L4 ME
171 595 765 112	12	95	850		0	1	B13	352	173	-	190	SMF - L5 ME

1. Plate group - Optimized design to ensure tightness
2. Negative Plate - NAM with optimized expander formulation contains special activated carbon
3. Full Frame Grid - Continous Casting Special PbCa alloy
4. Low Electrical Resistance PE separator with GM layer
5. Positive Plate_PAM Cycle Proof design with advanced TBLS+ (homogeneous structure 4BS)
6. Special Glass Fiber Nonwoven Scrim
7. Positive grid with full frame-punched Special PbCaSn alloy corrosion resistant

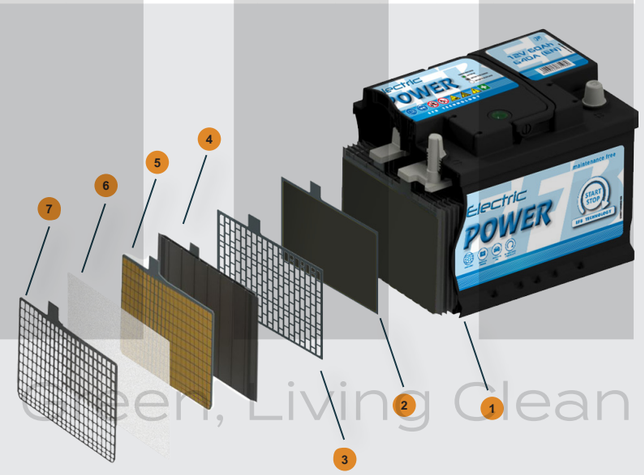

Battery classification as per EN 50342

JP Order code	Water consumption	Charge retention	Vibration resistance	Endurance level
EP 45-100Ah	W3	C2	V1	E1
EP 110-220 Ah HD	W3	C2	V2	E1
EP SHD	W3	C2	V3	E2
EFB	W3	C2	V2	E2

Notes: side 19.

POWERED BY EIC EGYPT

Semi Traction Battery
Marina & RV, Lawn & Garden

Semi Traction

Semi-traction batteries are constructed for cycling work systems. The tubular positive plates guarantee safe work and long battery life. They are applied as an energy source for lifting gears, cleaning machinery, caravans, golf cars, etc. Semi traction batteries provide a cost effective high performance solution.

Neutral Box

JP Order code	Model Nr.	Voltage [V]	Capacity 20 h [Ah]	DIN type	Layout[2]	Electrolyte content [l]	Fixation[4]	Dimensions [mm] L	W	H	Cycles
211 240 081 610		6	240	3TU 6E	2	-	B00	242	190	275	1200

Batteries for Marina and RV (recreational vehicle) for leisure like camping cars, caravans, etc.

Benefit:

- Longer life & high cycle stability
- High endurance in deep cycle service
- High endurance in deep cycle service
- Prevents internal short circuit
- Minimal self-discharge

Batteries for Marina and RV

JP Order code	Model Nr.	Voltage [V]	Capacity 20 h [Ah]	DIN type	Layout[2]	Elec-trolyte content [l]	Fixation[4]	Dimensions [mm] L	W	H	Cycles
DC24MF		12	80	1	-	-	B01	257	172	200/220	-
DC31MF		12	100	Central	-	-	B00	330	172	218/242	-

Lawn & Garden

JP Order code	Model Nr.	Voltage [V]	Capacity 20 h [Ah]	DIN type	Layout[2]	Elec-trolyte content [l]	Fixation[4]	Dimensions [mm] L	W	H	Cycles
U1MF-X		12	30	1	-	-	B00	205	132	160/185	-
U1RMF-X		12	30	0	-	-	B00	205	132	160/185	-

Motorcycle Battery

We are proud to be one of the very few companies in Hungary who are capable of supplying a range of motorcycle batteries, including Sealed Factory Activated, Maintenance Free, High Performance and Conventional type. Our motorcycle batteries carry the best in whole range of motor-cycle replacement batteries, include a large selection for BMW, Honda, Harley-Davidson, Yamaha, and all types of street motorcycles & off-road motorcycles. We also have a wide range of ATV batteries, Jet Ski batteries, and Snow Mobile batteries.

FEATURES OF OUR POWERSPORTS BATTERY:

- wide range;
- high & stable quality with outstanding value;
- state-of-the-art battery technology;
- low self-discharge;
- guaranteed longer service life;
- Superior Cranking;
- Superior Vibration Resistance;
- punctual delivery;
- 6-month-full warranty.

Recovery By Recharge

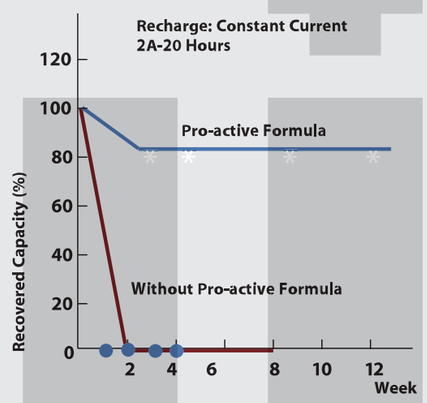

STUNNING BENEFIT OF OUR PRODUCTS:

When a battery has been stored too long before use, the plates change the chemical form to crystallized lead sulfate. This phenomenon is called sulfation (SO4).

Once this chemical reaction has taken place, it's very difficult to charge the battery to full capacity.

In order to reduce this problem, we add a special chemical product to the High Cranking batteries. Due to this Pro-active Formula, High Cranking Batteries can be charged to full capacity from the moment you use them.

Conventional Series

Model Nr.	Voltage [V]	Capacity 10 hr [Ah]	Dimensions [±1 mm]			Approx. Weight W/O. Acid [Kg]	Approx. Acid Per Battery [Kg]	Charge Current [A]	Assembly Figure	CCA/-18°C
			L	W	H					
6N2-2A	6	2	70	46	95	0.400	0.243	0.20		20
6N4-2A	6	4	70	70	95	0.520	0.256	0.40		30
6N4-2A-4	6	4	70	70	95	0.520	0.256	0.40		30
6CB8-3B (6CB8L-B)	6	8	120	70	95	1.090	0.614	0.80		64
B49-6	6	10	91	83	161	1.430	0.768	1.00		90
6N11A-3A	6	11	120	60	130	1.380	0.640	1.10		100
B38-6A	6	13	119	83	161	1.490	1.024	1.30		120
12N5.5A-3B	12	5.5	103	90	114	1.500	0.640	0.55		50
12N10-3B	12	10	135	90	145	2.280	1.024	1.00		110

High Performance Series Specification

Model Nr.	Voltage [V]	Capacity 10 hr [Ah]	Dimensions [±1 mm]			Approx. Weight W/O. Acid [Kg]	Approx. Acid Per Battery [Kg]	Charge Current [A]	Assembly Figure	CCA/-18°C
			L	W	H					
CB3L-A	12	3	98	56	110	0.880	0.510	0.30		35
CB4L-B	12	4	120	70	92	1.150	0.512	0.40		45
CB5L-B	12	5	120	60	130	1.480	0.640	0.50		60
CB7-A	12	8	135	75	133	1.920	0.768	0.80		100
CB7C-A	12	8	130	90	114	1.730	0.768	0.80		90
CB7L-B2	12	8	135	75	133	1.920	0.768	0.80		90
CB9-B	12	9	135	75	139	2.280	0.896	0.90		100
CB9L-A2	12	9	135	75	139	2.280	0.896	0.90		100
CB10L-A2	12	11	135	90	145	2.600	1.024	1.10		160
CB12A-A	12	12	134	80	160	3.100	0.947	1.20		155
CB12AL-A2	12	12	134	80	160	3.100	0.947	1.20		155
CB14-A2	12	14	134	89	166	3.600	1.216	1.40		185
CB14-B2	12	14	134	89	166	3.600	1.216	1.40		185
CB14L-A2	12	14	134	89	166	3.600	1.216	1.40		185
CB14L-B2	12	14	134	89	166	3.600	1.216	1.40		185
CB16AL-A2	12	16	205	70	162	4.000	1.792	1.60		220
CB16B-A	12	16	160	90	161	3.860	1.792	1.60		210
HCB16A-A	12	16	151	91	180	3.800	1.792	1.60		160
CB16L-B	12	19	175	100	155	4.500	1.792	1.90		230
C50-N18L-A	12	20	205	90	162	4.530	1.792	2.00		250
C60-N30L-A	12	30	187	130	170	6.500	2.560	3.00		320
CB30L-B	12	30	168	132	176	6.196	2.304	3.00		345

Maintenance Free Series Specification

Model Nr.	Same Dimensions As YUASA Model	Voltage [V]	Capacity 10 hr [Ah]	Dimensions [±1 mm]			Approx. Weight W/O. Acid [Kg]	Approx. Acid Per Battery [Kg]	Charge Current [A]	Assembly Figure	CCA/-18°C
				L	W	H					
YTR4A-BS		12	2.3	113	48	85	0.840	0.166	0.25		45
YTX4B-BS		12	2.3	113	38	85.5	0.690	0.174	0.23		40
YTX4L-BS		12	3	113	70	85	1.050	0.300	0.3		50
YTX5L-BS		12	4	113	70	105	1.470	0.333	0.4		70
YTZ5-BS	YTZ5-S	12	4	113	70	85	1.150	0.290	0.4		50
YTX7A-BS		12	6	150	87	93	1.810	0.467	0.6		90
YTX7L-BS		12	6	113	70	130	1.840	0.467	0.6		85
YTZ7-BS	YTZ7S	12	5	113	70	105	1.550	0.330	0.5		85
YT7B-BS	YT7B-4	12	6.5	150	65	93	1.650	0.459	0.6		70
YTX9-BS		12	8	150	87	105	2.200	0.570	0.8		120
YT9B-BS	YT9B-4	12	8	150	65	105	2.650	?	0.8		90
YTZ10-BS	YTZ10-S	12	8.6	150	87	95	2.900	?	0.85		130
YTX12-BS		12	10	150	87	130	3.120	0.760	1		180
YTX12A-BS		12	9.5	150	87	105	2.330	0.570	1		140
YT12B-BS	YT12B-4	12	10	150	69	130	2.450	0.697	1		125
YTZ12-BS	YTZ12-S	12	11	150	87	110	3.300	?	1.1		140
YTX14-BS		12	12	150	87	145	3.600	0.879	1.2		200
YT14B-BS	YT14B-4	12	12	150	70	145	3.750	?	1.2		140
YTZ14-BS	YTZ14S	12	11	150	87	110	3.300	?	1.2		140
YTX16-BS		12	14	150	87	161	3.920	0.990	1.4		230
YTX20L-BS		12	18	175	87	155	4.750	1.172	1.8		270
YTX20CH-BS	YTX20A-BS	12	18	150	87	161	4.000	0.990	1.8		240

Sealed Maintenance Free Series Specification

Model Nr.	Same Dimensions As YUASA Model	Voltage [V]	Capacity 10 hr [Ah]	Dimensions [±1 mm]			Weight [Kg]	Charge Current [A]	Assembly Figure	CCA/-18°C
				L	W	H				
YS12-18	SLA12-18/NH12-18	12	20	181	77	167	5.220	1.80		170

MOTORCYCLE
SINCE 1959
Leaders Green Living Clean
EGYPT

POWERED BY EIC EGYPT

Traction Battery

ELECTRIC POWER DIN/PzS range

ABOUT OUR PRODUCT RANGE:

Lead acid traction batteries are used to provide motive power for electric vehicles such as forklifts, traction and transportation vehicles, electric lifting equipments and many others.

Single traction cells consist of pasted negative and tubular positive plates. The length and number of plates determine the capacity of a cell given as 5-hour discharge rate capacity (C5).

We offer many different cell types (DIN-L, DIN-S and BS design), described by capacity and dimensions. The whole range of traction cells are made in accordance with **EN 60254-1, EN 60254-2** standards.

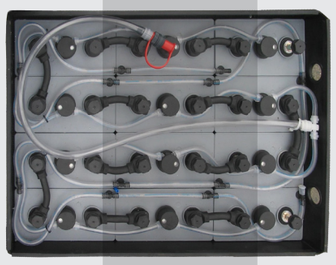

DESIGNATION OF DIN CELLS

2 PzS 120L 2P250L

- 2 — No. of positive plates per cell
- PzS — Tubular plates for traction cells
- 120L — Capacity (Ah/cell)
- 2P250L — JP designation

a = Width

b = Length (DIN: 198 mm, BS: 158 mm)

h = Height

h1 = Total height

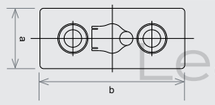

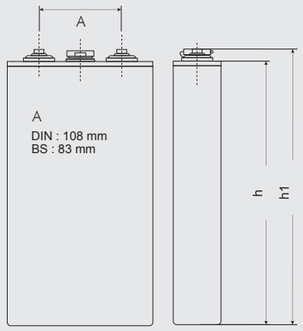

TRACTION CELL

1. Positive tubular plate
2. Microporous Separator
3. Negative plate
4. Negative grid
5. Container (polypropylene)
6. Cover (polypropylene)
7. Positive strap
8. Negative strap
9. Rubber sealing
10. Plug
11. Settling rib
12. Terminals

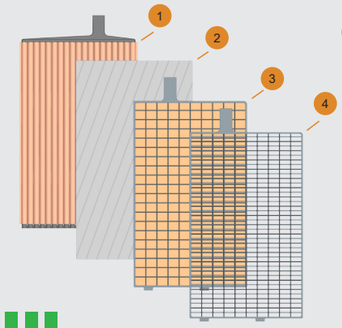

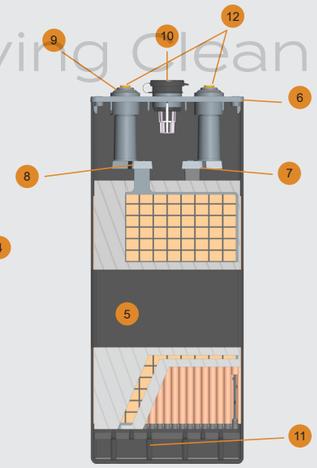

Leading Green, Living Clean

POWERED BY EIC EGYPT

	Cell type (DIN-L)	Cell type (JP)	Capacity 5h [Ah]	Dimensions [mm] Width (a)	Length (b)	Height (h)	Total Height	Cell weight +/- 5% [kg] Without acid	With acid
60 Ah / plate	2PzS120L	2P250L	120	47	198	340	365	6,6	8,2
	3PzS180L	3P250L	180	65				9,0	12,0
	4PzS240L	4P250L	240	83				11,8	15,0
	5PzS300L	5P250L	300	101				14,4	17,9
	6PzS360L	6P250L	360	119				17,2	21,3
	7PzS420L	7P250L	420	137				19,4	25,4
	8PzS480L	8P250L	480	155				22,2	27,1
80 Ah / plate	2PzS160L	2P310L	160	47	198	405	430	8,2	10,5
	3PzS240L	3P310L	240	65				11,2	14,6
	4PzS320L	4P310L	320	83				14,6	19,0
	5PzS400L	5P310L	400	101				17,8	22,8
	6PzS480L	6P310L	480	119				20,8	27,2
	7PzS560L	7P310L	560	137				24,4	31,8
	8PzS640L	8P310L	640	155				27,8	35,6
90 Ah / plate	2PzS180L	2P380L	180	47	198	475	500	9,4	12,0
	3PzS270L	3P380L	270	65				12,8	16,0
	4PzS360L	4P380L	360	83				17,2	21,4
	5PzS450L	5P380L	450	101				20,8	25,8
	6PzS540L	6P380L	540	119				25,4	32,0
	7PzS630L	7P380L	630	137				28,4	37,0
	8PzS720L	8P380L	720	155				31,8	39,8
105 Ah / plate	2PzS210L	2P400L	210	47	198	518	543	10,7	13,1
	3PzS315L	3P400L	315	65				14,9	18,5
	4PzS420L	4P400L	420	83				19,6	25,1
	5PzS525L	5P400L	525	101				24,1	30,9
	6PzS630L	6P400L	630	119				28,4	35,7
	7PzS735L	7P400L	735	137				32,7	41,4
	8PzS840L	8P400L	840	155				37,3	47,3
115 Ah / plate	2PzS230L	2P440L	230	47	198	570	595	11,6	15,4
	3PzS345L	3P440L	345	65				16,2	21,0
	4PzS460L	4P440L	460	83				20,6	27,4
	5PzS575L	5P440L	575	101				25,8	33,6
	6PzS690L	6P440L	690	119		on request*		30,4	39,8
	7PzS805L	7P440L	805	137		550	575	35,2	46,2
	8PzS920L	8P440L	920	155				41,0	52,6
125 Ah / plate	2PzS250L	2P445L	250	47	198	570	595	12,3	16,2
	3PzS375L	3P445L	375	65				17,2	22,7
	4PzS500L	4P445L	500	83				21,8	28,8
	5PzS625L	5P445L	625	101				26,9	35,5
	6PzS750L	6P445L	750	119				31,8	42,0
	7PzS875L	7P445L	875	137				36,6	48,3
	8PzS1000L	8P445L	1000	155				42,6	56,2
140 Ah / plate	3PzS420L	3P550L	420	65	198	720	745	21,4	27,0
	4PzS560L	4P550L	560	83				25,6	33,0
	5PzS700L	5P550L	700	101				31,6	41,8
	6PzS840L	6P550L	840	119		on request*		36,2	47,0
	7PzS980L	7P550L	980	137		700	725	39,8	53,8
	8PzS1120L	8P550L	1120	155				45,1	61,1
155 Ah / plate	3PzS465L	3P555L	465	65	198	720	745	21,5	28,6
	4PzS620L	4P555L	620	83				26,6	35,4
	5PzS775L	5P555L	775	101				33,0	43,9
	6PzS930L	6P555L	930	119				38,5	51,2
	7PzS1085L	7P555L	1085	137				44,4	59,1
	8PzS1240L	8P555L	1240	155				50,2	66,8

*Please note that we can produce the 115 Ah and 140 Ah series with 20 mm lower height by customer's special request. The cells are without cable connector and screw.

BS/PzB range
JPOPzS cell

Traction Battery Accessories

British cell

ADVANTAGES

- Wide range of application
- Capacity for BS product range: 150-400Ah
- Lead-acid vented batteries with liquid electrolyte
- Modern tubular design maximises the active lead material

	Cell type (DIN)	Cell type (JP)	Capacity 5h [Ah]	Dimensions [mm]				Cell weight +/- 5% [kg]	
				Width (a)	Length (b)	Height (h)	Total Height	Without acid	With acid
75 Ah /plate	2PzB150	2BS150	150	45	158	513	537	8,08	10,50
	3PzB225	3BS225	225	61				11,46	14,30
	4PzB300	4BS300	300	77				14,70	18,50
100 Ah /plate	2PzB200	2BS200	200	45	158	604	628	9,68	12,50
	3PzB300	3BS300	300	61				13,84	16,90
	4PzB400	4BS400	400	77				18	22,40

JPOPzS cell

The individual cells (2V) and blocks are in plastic containers made of PP (polypropylene). This range of RES **JPOPzS** cells are specially designed for solar applications. These cells are suitable for off-grid solar systems due to their extremely low self-discharging and tubular + plates.

ADVANTAGES

- Quick and simple acid level control
- Economical water consumption
- Reduced maintenance
- Long life time

Cell type (DIN)	Cell type (JP)	Capacity of cell C10 [Ah] Uf=1,8V at 20°C	Dimensions [mm]			Cell weight +/- 5% [kg]	
			Width (a)	Length (b)	Height (h)	Without acid	With acid
3 JP-OPzS265	361 3TO 265 030	265	83	198	465-2	12,80	18,10
4 JP-OPzS352	361 4TO 352 030	352	101			16,40	22,60
5 JP-OPzS442	361 5TO 442 030	442	119			19,60	28,20
4 JP-OPzS500	361 4TO 500 030	500	101	198	608-2	22,00	30,50
5 JP-OPzS625	361 5TO 625 030	625	119			26,80	37,10
6 JP-OPzS750	361 6TO 750 030	750	137			32,40	44,80
7 JP-OPzS875	361 7TO 875 030	875	155			36,20	49,70

Spare parts of water refilling system	JP Order code	Type
1	A51000	push-in plug[1]
2	08SCH6	PVC hose NW6/meters[2]
	08SCH1	PVC hose NW10/meters[2]
3	072220	float 2220[3]
	072224	float 2224[3]
	072229	float 2229[3]
	072234	float 2234[3]
	072239	float 2239[3]
4	072244	float 2244[3]
	072249	float 2249[3]
	072259	float 2259[3]
5	08T161	T 10/6/10[4]
	08T111	T 10/10/10[4]
	08WI16	angle 10/6[4]
	08T616	tee 6/10/6[4]
	08T666	tee 6/6/6[4]
6	08KR61	cross 6/10/6/10[4]
7	08KR66	cross 6/6/6/6[4]
	08END6	end piece NW6[5]
	08KLE6	hose clamp NW6[5]
	08KLE1	hose clamp NW10[5]
8	09KUV1	connection male NW10[6]
	09KUM1	connection female NW10[6]
9	09FIL1	filter cartridge[7]
	09STAC	dust cap "C" [8]
	09FLI1	flow indicator[9]

HydroFill 12V DC35Ltr Cart -EU	JP Order code
	CRT-2A2EU

GUN-XEU Universal Watering Gun	JP Order code
	GUN-XEU

Filling Adapter Static Pressure regulator set to 10psi ACC-003	JP Order code
	ACC-003

DRAINP-MAN-6L Drainage Pump 6 l for battery boxes	JP Order code
	DRAINP-MAN-6L

Battery Voltage Tester [V]	JP Order code
12	TESTER_TR600
2	TESTER_TR150

Airmixing-EUW.../cell	JP Order code
	40040001

Tank for gravity topping up system 30 l, RB-30 model	JP Order code
	TA.5169

Blinky	JP Order code
	SMART_BLINKY

Screw for bolted battery cable connector	JP Order code	Dimension
	M10x22	M10x22 brass, with tuft lock with measuring point extrapolated

BFS III. battery water refilling system	JP Order code	Type
	VIZUT_12V	Water refilling system for 12V
	VIZUT_24V	Water refilling system for 24V
	VIZUT_36V	Water refilling system for 36V
	VIZUT_40V	Water refilling system for 40V
	VIZUT_48V	Water refilling system for 48V
	VIZUT_80V	Water refilling system for 80V

SINCE 1959
Leading Green, Living Clean
TRACTION
EGYPT
POWERED BY EIC EGYPT

Traction Battery Accessories

End leading-out cable	JP Order code	Dimension	pcs/crt
	VKABEL 35X1500	35x1500 mm application: up to 540 Ah	30
	VKABEL 50X1500	50x1500 mm application: between 541 Ah and 770 Ah	26
	VKABEL 70X1500	70x1500 mm application: from 771 Ah	16

Plug with basket	JP Order code	Hight [mm]	Basket colour
	TPS-L64-F-N	46	white
	TPS-L69-F-N	51,5	yellow
	TPS-L84-F-N	63,5	nature

Sleeve BLUE/RED	Packaging	JP Order code
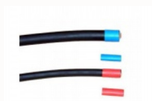	**Sleeve Blue - per 100 pcs.**	**MOF-7.5/12-BL**
	Sleeve Red - per 100 pcs.	**MOF-7.5/12-RED**

Spiral Wrapping Black	Packaging	JP Order code
	(D = 15.8 mm), Packing 20m	**SPSCH15CON**

Cable Clamp for Battery Tray	Type	JP Order code
	Cable Clamp for Battery Tray 25mm² D= 10	**ZGEL25**
	Cable Clamp for Battery Tray 35 mm² -D= 12	**ZGEL35**
	Cable Clamp for Battery Tray 50 mm² -D= 14	**ZGEL50**
	Cable Clamp for Battery Tray 70 mm² -D= 16	**ZGEL70**

Flexible bolted battery cable connector	JP Order code	Dimension	pcs/crt
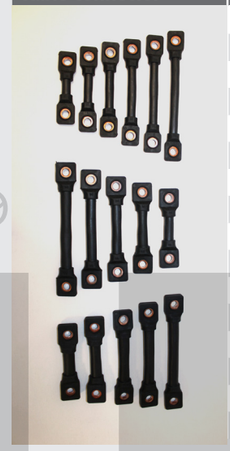	**NKABEL 35X75**	35x75	300
	NKABEL 35X95	35x95	300
	NKABEL 35X110	35x110	300
	NKABEL 35X130	35x130	250
	NKABEL 35X150	35x150	250
	NKABEL 35X170	35x170	200
	NKABEL 50X95	50x95	250
	NKABEL 50X110	50x110	250
	NKABEL 50X130	50x130	200
	NKABEL 50X150	50x150	150
	NKABEL 50X170	50x170	150
	NKABEL 70X95	70x95	200
	NKABEL 70X110	70x110	200
	NKABEL 70X130	70x130	150
	NKABEL 70X150	70x150	150
	NKABEL 70X170	70x170	120

Stackable packing plates	JP Order code	Type	PCS/ Pallet
	EKELO390X200X05	5x200x390	3000
	EKELO545X200X05	5x200x545	2100
	EKELO565X200X05	5x200x565	2100
	EKELO690X200X05	5x200x690	1500
	EKELO710X200X05	5x200x710	1500
	EKELO390X200X10	10x200x390	2000
	EKELO545X200X10	10x200x545	1400
	EKELO565X200X10	10x200x565	1400
	EKELO690X200X10	10x200x690	1000
	EKELO710X200X10	10x200x710	1000

BIO15 BIO 15 - PEAR 340ml (N°12) with pipe 70 mm	JP Order code
	BIO15

AK-SP-6620 Acid-syphon - glass - tube 4 mm, incl. thermometer	JP Order code
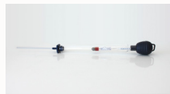	**AK-SP-6620**

SINCE 1959
Leading Green, Living Clean
TRACTION

POWERED BY EIC EGYPT

Notes

1. Cold cranking

Battery has been discharged with specified current at -18 °C.

EN requirement:

The voltage is not allowed to decrease in the 10th sec. below 7,5V. After 10 seconds of pause, we continue the discharging with 0.6 x Icc till 6V. Regulation to reach the final voltage, min. 2,5 minutes have to elapse.

DIN requirement:

The cell voltage is not allowed to decrease in the 30th second below 1,5 V (for a 12V battery below 9V) and in the 150th second below 1V (for a 12V battery below 6V).

2. Layout

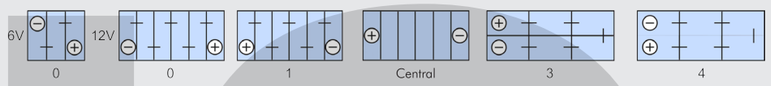

3. Terminals

1 Standard terminal

3 Small terminal

U1 Lug

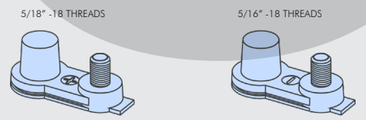

Marine Twin

4. Fixation

B00 Without hold down

B01 Base ledges at longitudinal sides 10,5 mm high.

B03 Base ledges 10,5 mm high at longitudinal and broad sides.

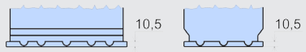

B13 Base ledges 10,5 mm high at longitudinal and broad sides.

5. Notes

Ge: Battery with central venting

Fo: With handles

Me: With Magic Eye

SINCE 1959

EIC EGYPT

Leading Green, Living Clean

FORCEZ

01010002030

info@eic-egyptcom

www.eic-egypt.com

/EICGROUP1959

Km 23 - EgyptAlexandria DesertRoad - Aborawash, Giza